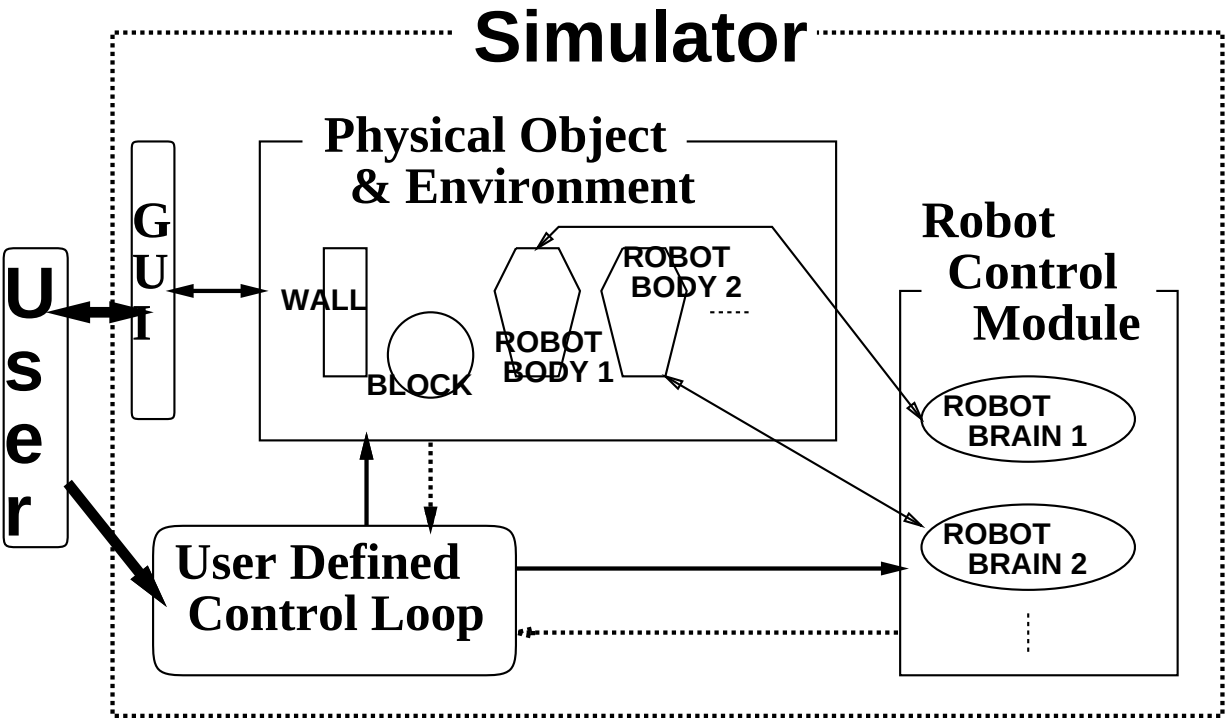
Simulator
Physical Object
& Environment
GUI
User
WALL
BLOCK
ROBOT
BODY 1
ROBOT
BODY 2
Robot
Control
Module
ROBOT
BRAIN 1
ROBOT
BRAIN 2
User Defined
Control Loop